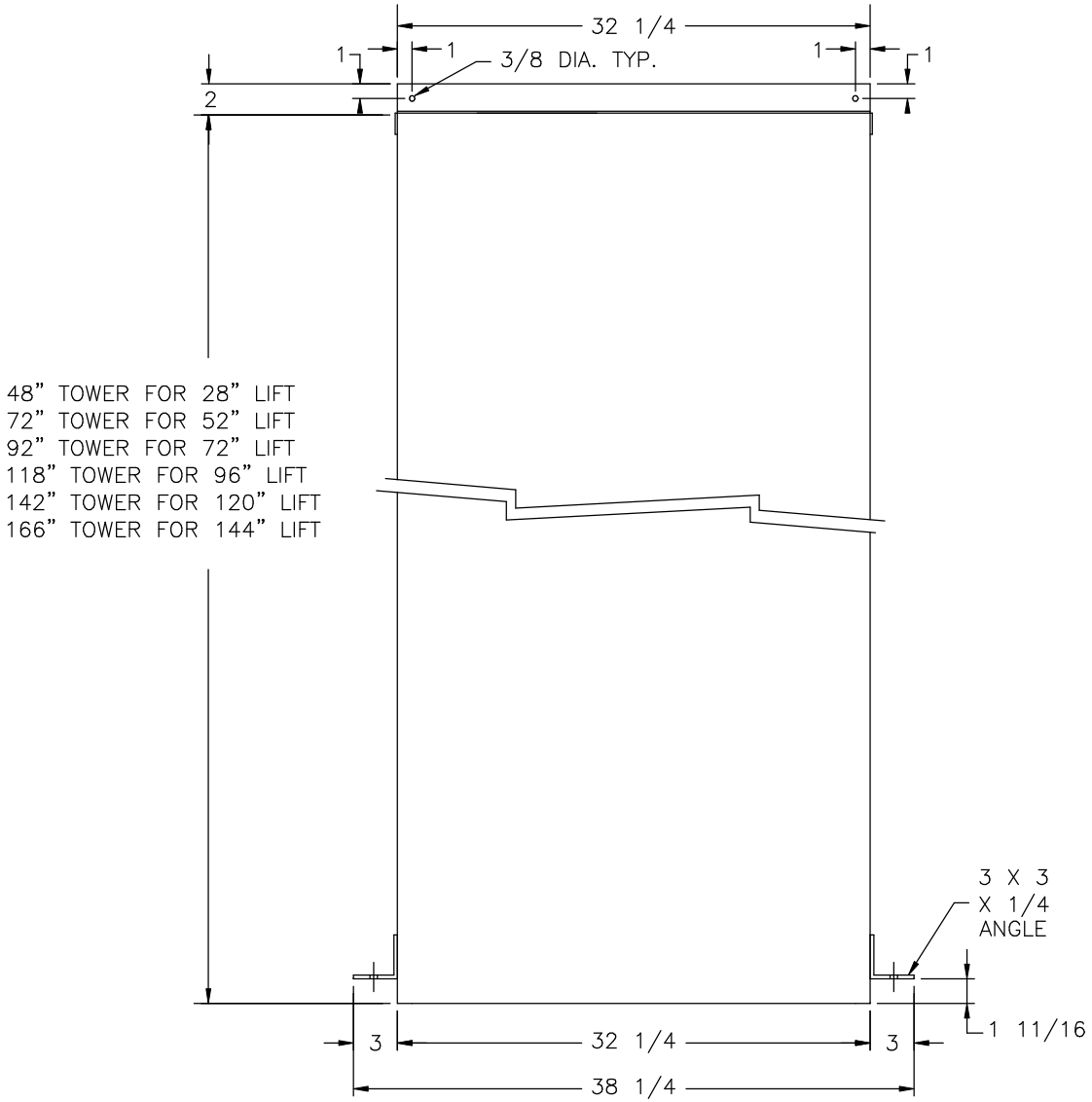

FRONT VIEW

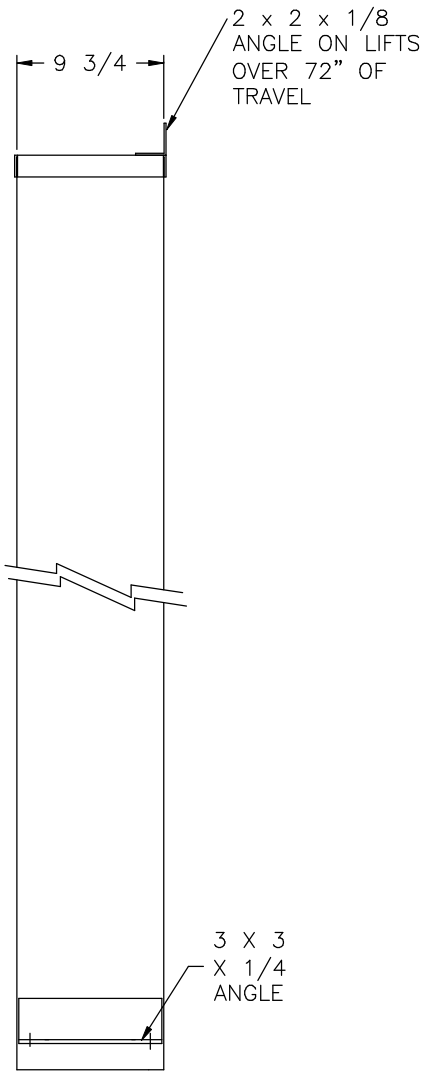

SIDE VIEW

REV	BY	DATE	DESCRIPTION

RAM MANUFACTURING LTD.

DWN. BY: B. HANNAH	RAM TRUS–T–LIFT TOWER DIMENSIONS		
CHECKED BY:			
SCALE: NTS	DATE: 2 /Apr /08	DRAWING No. TowerDims	REV A